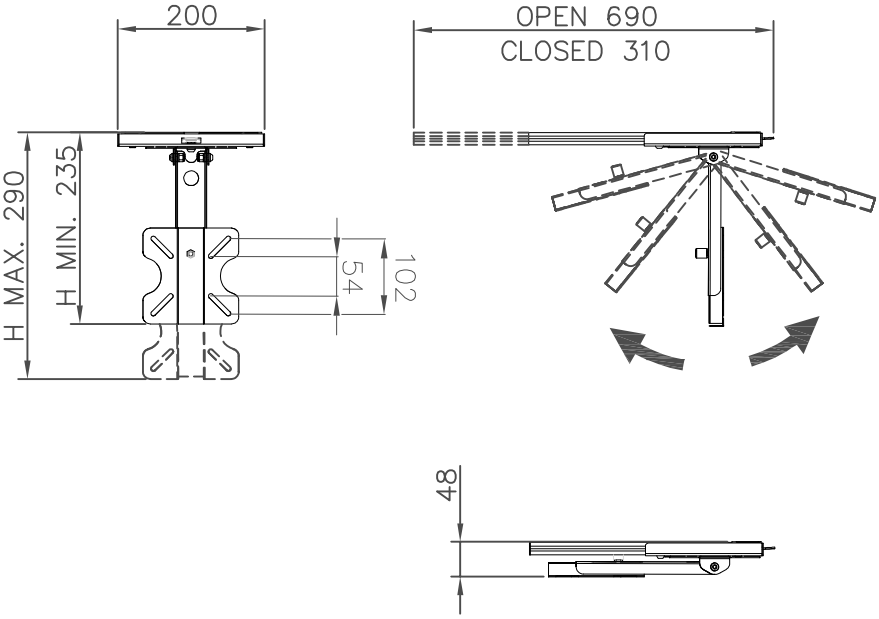
200
OPEN 690
CLOSED 310
H MAX. 290
H MIN. 235
54
102
48