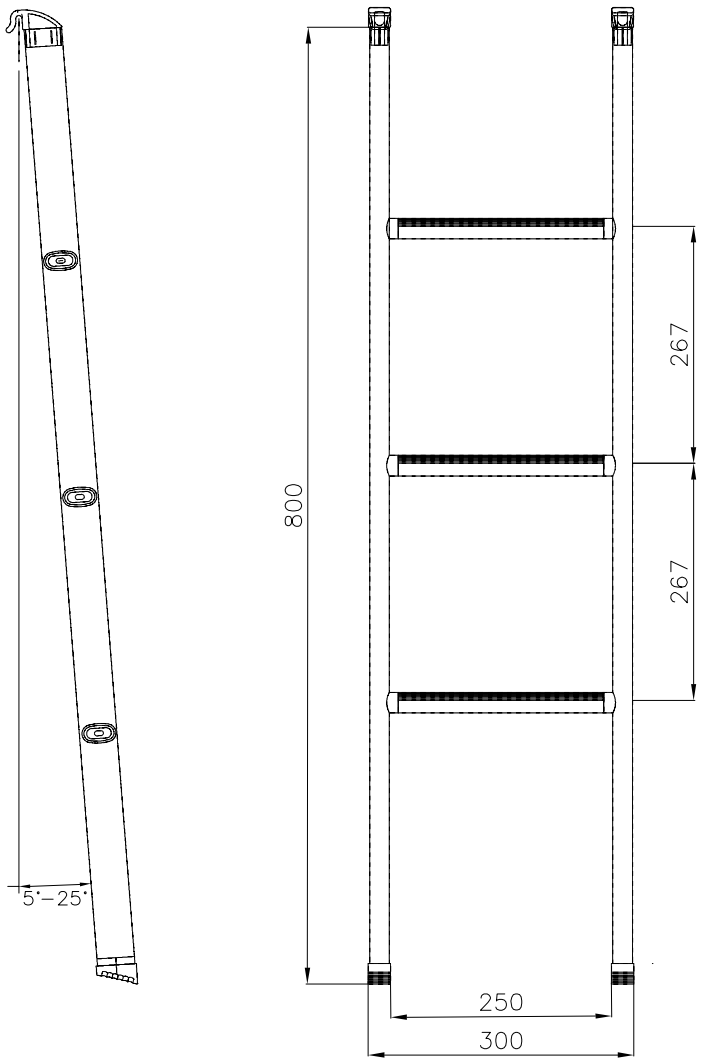
5°–25°
800
267
267
250
300

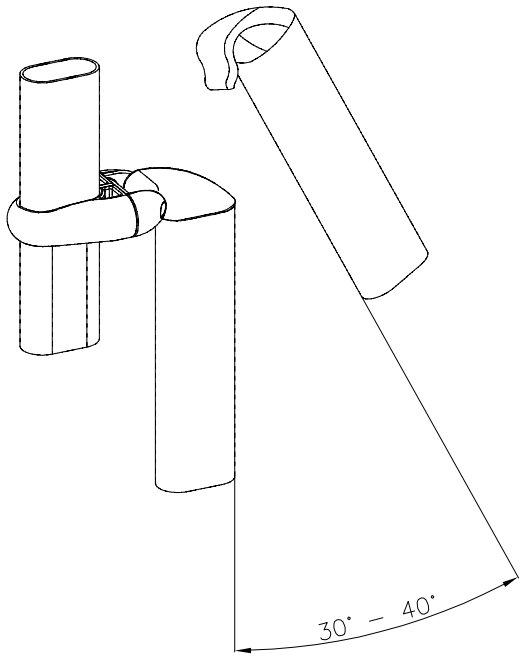
30° – 40°